FIELD-THEORETIC METHODS IN PION-NUCLEUS INTERACTIONS*,+

K.L. Kowalski

Department of Physics

Case Western Reserve University

Cleveland, Ohio 44106

Abstract

Existing field-theoretical approaches to the description of pion-nucleus interactions are reviewed with special attention to the description of the nuclear bound state. The implications of a field-theoretic description of the problem which treats nuclei in a consistent fashion are illustrated by means of a detailed and largely qualitative graphical analysis of pion-^{3}He absorption and elastic scattering.

*Invited talk delivered at the Tri-State Nuclear Theory Conference, The Ohio State University, April 1980.

†This work was supported in part by the National Science Foundation under Grant No. PHY78-26595.

I. WHY DO WE NEED FIELD THEORY?

Before we attempt to answer this question it is useful to recall the usual theoretical model for nuclear reactions below the threshold for pion production.

Standard (Non-Relativistic) Model of Projectile-Nucleus Interactions:

(a) There is a fixed number of elementary constituents (nucleons).

(b) The elementary constituents are not involved in mediating interactions.

(c) There is a well-understood algorithm for calculating transition amplitudes in terms of matrix elements of specific operators sandwiched between initial- and final-state wave functions. The meaning of these asymptotic states is unequivocal.

None of these features are realized to the same degree of accuracy in pion-nucleus interactions. However, this fact has not discouraged the application of the preceding standard model to the description of elastic pion-nucleus scattering, in particular, and often with some success. Nevertheless, the standard model fails unambiguously in pion absorption processes and thus some concession to relativistic dynamics must be made in these instances. Since pions can be created and destroyed during the evolution of even an elastic process the standard model fails here also although the quantitative effects of the so-called "true absorption" may be small under certain circumstances. Field theory is the only way we know how to handle particle creation and destruction in a systematic and convenient fashion and this provides an answer to the question heading this section.

In this talk we first review briefly how field theory has been utilized in pion-nucleus physics. Then we describe some recent work using the field-theoretical approach which is motivated by the problem presented by pion absorption. This description is relatively qualitative and takes the form of the graphical exhibition of the constraints imposed by field theory on the amplitudes for the processes

$$\pi + {}^3\mathrm{He} \to N + d \quad , \tag{1.1}$$

$$\pi + {}^3\mathrm{He} \to \pi + {}^3\mathrm{He} \ . \tag{1.2}$$

The nucleon bound states which enter into (1.1) and (1.2) are simple enough to avoid overcomplicating our diagrams yet sufficiently complex to illustrate the rules of the game.

II. EXTANT FIELD THEORY TREATMENTS OF PION-NUCLEUS INTERACTIONS

A considerable literature has arisen which is concerned with the field-theoretic description of the interactions of pions with nuclei. We review this work primarily as a counterpoint to our own work and for this reason our list of references is not exhaustive. We omit entirely all works on pion-nucleus interactions which do not use field theory at least implicitly (The host of papers using nonrelativistic multiple scattering theory and similar approaches to the pion-nucleus optical potential fall into this excluded class.) Also as a matter of convention and principle we do not consider the usual lot of nonrelativistic second-quantized descriptions of the nuclear medium to be field theory either.

(a) Variants of Chew-Low Theory (Refs.1)

The aim of these investigations is to graft a standard static Chew-Low description of the pion-nucleon interaction onto the usual nuclear

physics phenomenology. The formalism connected with some of this work is both formidable and remote from the physical situation. Miller[1] obtained a linear integral equation which is equivalent to a truncated Low equation. The propagator of the linear equation has a novel structure which suppresses high-momentum transfer pion exchanges.

(b) LSZ → Low Equation → (i),(ii) or (iii)

Here things start out quite generally from fully relativistic reduction formulas.[2] However, compromises come fast and in large numbers. A hint to what we personally find wanting in all of the field-theory work we review in this Section is contained in these reduction-formula papers to wit: No one has really come to grips with the problem of reducing (in the LSZ sense) a nucleon out of the nuclear bound state.

The three subdivisions of this work follow:

(i) Current Algebra Approaches (Refs.3)

Much of this work is quite sophisticated and yields definitive calculational prescriptions. Crossing symmetry plays a big role. Many of the problems we discuss later are recognized here in one form or another. We point out that many of the calculational procedures which are proposed in Refs. 3 are not easily describable in terms of sums of Feynman graphs. Therefore a direct comparison with some aspects of our approach is difficult.

(ii) Chew-Low Embellishments (Refs. 4)

After many approximations this approach leads back to something similar to that obtained in (a). In some of these works considerable effort is devoted to the justification of the multiple scattering picture of the pion-nucleus optical potential. Very little in the way of anything both distinctive and practical has yet emerged from this work.

(iii) Novel (Ref. 5)

This work Hackman is a tour de force of reduction techniques applied to $\pi d \longleftrightarrow P P$. Again (because of the use of the Low equation) some of the approximations which are introduced are not easily translated into Feynman graph language. This work purports to achieve some of the same results we claim but without a direct confrontation as to the structure of the nuclear bound state (deuterium).

(c) π NN-System Field Theory [Alberg et al., Ref 1 ; Ref. 5, Refs. 6 (- this is not exhaustive), Ref. 7]

This subculture of pion-nucleus physics includes some of the techniques represented by (a) and (b). However, the $\pi N N$ problem deserves separate billing because of the extensive amount of work devoted to this problem and the fact that Faddeev techniques are often employed for various of its truncated versions. These two circumstances are not unrelated since the availability of tractable multiparticle scattering integral equations has encouraged detailed calculations of the related processes

$$\pi + d \rightarrow \pi + d \tag{2.1}$$

$$\pi + d \longleftrightarrow N + N \ . \tag{2.2}$$

Some of this work bears considerable resemblance to our later development. However, the crucial differences are pointed out in detail. In this regard, it is useful to mention that the seemingly impeccable treatment of Taylor (Ref. 7) of $\pi N N$ has little to say concerning folding in the $N N$ bound state.

(d) Phenomenological Field Theory (Refs. 8, Not exhaustive)

References 8 are concerned with pion absorption on deuterium; however, some of the techniques used by these authors may be useful under more complicated situations. The approaches are all different. Green and Niskanen introduce Δ components into the correlated N N wave functions. Brack et al. deal mainly with the two-nucleon absorption mechanism via pion and ρ exchange. One of their principal results is that the large momentum transfer contributions of each tend to interfere destructively.

Keister and Kisslinger[8] capture some of the spirit of our later development. They consider in some detail the two-nucleon absorption contribution in $\pi + d \longleftrightarrow N N$ which is depicted in Fig. 1. What is really refreshing about the treatment of these authors is their consideration

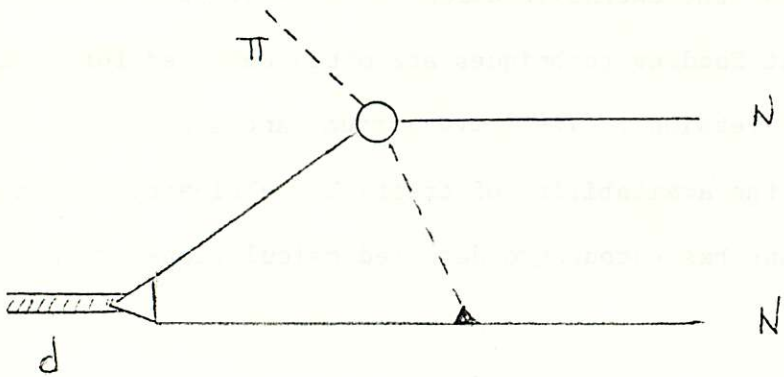

Fig. 1

of the full complexity of the amplitude in question coupled with a careful and physically reasonable investigation of the circumstances various simplifications are likely to be valid. For example, the authors point out those kinematic regimes where an approximation of the d N N vertex function

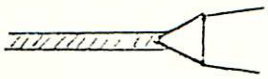

in terms of a nonrelativistic wave function is probably adequate. Keister and Kisslinger use a full (including the nucleon pole terms) π N off-mass shell t-matrix to represent the circle in

Fig. 1. This, as we see later, entails some double counting of the dynamical content of the deuteron. However, the authors do attempt to treat (phenomenologically) the off-mass shell behavior of the pion and they achieve the high momentum damping of the exchanged pion in this way. They conclude that the ρ- exchange counterpart of Fig. 1 is down on order of magnitude from the pion exchange graph. In execution, this work is phenomenological; however it highlights some of the important aspects of a few of the questions we take up later.

(e) Brooklyn Field Theory (Refs. 9)

A considerable corpus of work concerned with the application of field theory to both nucleon and pion nucleus interactions has been generated by the Brooklyn College group over the past decade. Most of these papers are concerned with the construction of what is alleged to be a covariant optical potential for hadron-nucleus scattering. It is of considerable interest to review the essential points of this approach in order that we can appreciate the points of overlap with our later development as well as those aspects of which are different. This is particularly important to do because much of the terminology of Refs.9 as well as some of the graphical techniques are similar to ours.

Let M denote the elastic pion-nucleus amplitude which we represent graphically as

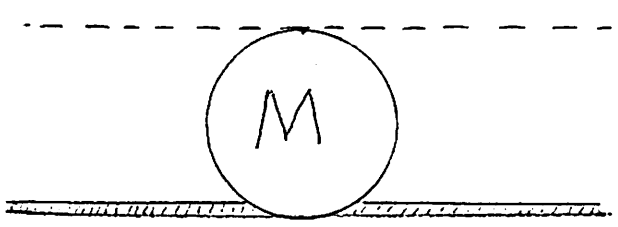

Fig. 2

The dotted line represents the pion and the cross-hatched line the nucleus. A linear integral equation for M is obtained by a formal extension of the Bethe-Salpeter technique to the case at hand with the result

$$M = K + K\,G\,M \quad . \tag{2.3}$$

The "kernel" K represents the sum of all graphs which are <u>irreducible</u> with respect to single-pion and single-nucleus intermediate states. Any graph contributing to M which is <u>reducible</u> with respect to these states can be drawn in the form

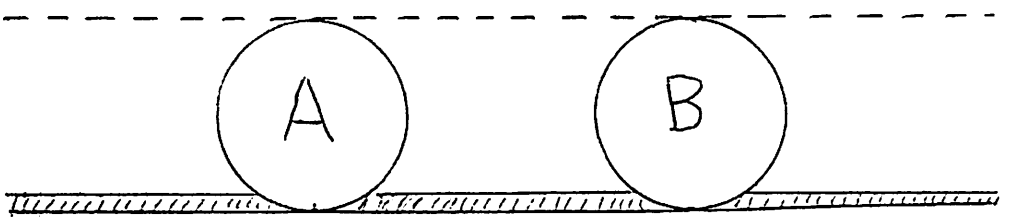

Fig. 3

Here A and B are arbitrary (connected) blobs. In (2.3) G represents the product of propagators for the type of intermediate state which is explicitly drawn in Fig. 3 and consists only of a pion and the ground state of the target nucleus-off its mass shell. The kernel K evidently suggests itself as a pion-nucleus optical potential.

At this stage one can question the rationale of the entire procedure which rests upon the validity of the idea of the propagation of nuclei in intermediate states as if they were elementary particles. Evidently this is true to some level of approximation (and this approximation is eventually made in Refs. 9). However, <u>in general</u> the concepts of irreducibility and reducibility of Feynman graphs with respect to bound states appear to be a

bit murky. At this stage, the derviation of (2.3) must be regarded as heuristic. An introduction to some of the intricate problems which are involved in incorporating bound states into a field-theoretic description of hadron-nucleus scattering is presented in the next section.

Once the target nucleus as well as the various nuclei into which it can be decomposed are regarded as elementary particles things simplify tremendously. An elaborate set of Feynman graph rules for calculating amplitudes is developed in Refs. 9. Things are still not simple enough for practical calculation but a step in this direction is taken by making a Blankenbecler-Sugar[10] reduction of (2.3) to an integral equation in one vector variable. This is achieved by a simplification of the fully relativistic propagator G which is consistent with elastic unitarity.

An enormous amount of physics still resides in K. Nearly all of the work in Refs. 9 which is directed towards practical calculation is concerned solely with the careful evalution of the impulse graph contribution to K which is depicted in Fig. 4.

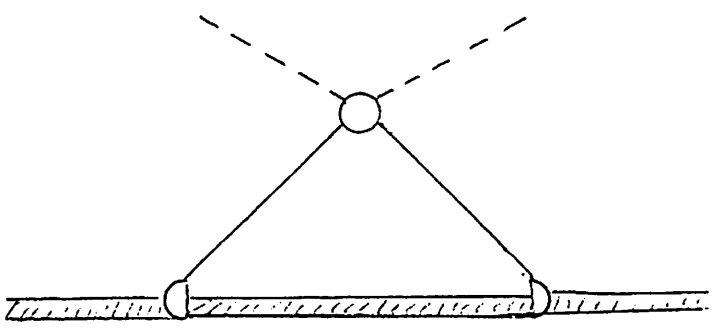

Fig. 4

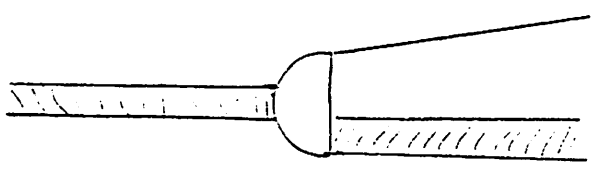

Fig. 5

Figure 5 represents the A-(A-1)-N vertex function. We have more to say about this function later. The circle in Fig. 4 represents the off-mass shell π-N transition amplitude.

The results obtained using the approach of Refs. 9 are described in detail in Ref. 11. Two overall observations can be made concerning this work. First, as compared to the pot-pourri of alternative methods for dealing with elastic pion-nucleus scattering the methods of Refs. 9 stand out favorably in their efforts to deal with some of the more difficult questions, such as Fermi motion, in a rational manner within a coherent theoretical framework. Second, after wondering about the validity of the starting point (irreducibility with respect to internally propagating nuclear bound states, etc.) and wading through the stunning string of approximations which are needed before numbers can be generated it is not clear that the entire approach is anything but an algorithm (albeit a superior one) for introducing relativistic kinematics into a description of the optical potential.

III. THINKING ABOUT THE NUCLEAR BOUND STATE

Presumably one of the reasons for investigating pion-nucleus interactions is to learn something about nuclei. Thus, it is a little surprising that all of the work referred to in Sec. II has very little new to offer about how nuclei are described in pion elastic scattering, reaction and absorption processes.[12] Something new is certainly provided by recent field-theoretic descriptions of nuclei.[13] However, virtually all of this work is either concerned with isolated nuclei or with nuclear matter. The sort of information gleaned from such studies is therefore not directly applicable to the description of pion-nucleus interactions.

It is important at this stage to maintain a careful distinction between a nuclear bound state and a nuclear wave function. Presumably the latter is a mathematical representation in terms of a given Hamiltonian of the former physical entity. However, many physical approximations have been made to arrive at the usual nonrelativistic,

$$H \mid \Psi > \; = E \mid \psi > \; , \tag{3.1}$$

$\psi(\vec{r}_1,\ldots,\vec{r}_a)$ - type description which is part of almost all nuclear phenomenology. Thus, attempts to append such descriptions onto intrinsically relativistic phenomena such as pion absorption are likely to involve some ambiguities. Such ambiguities over what is meant by a nuclear "wave function" have led to what are referred to as overcounting problems. These problems have arisen in the description of three-body force effects in nuclear matter,[14] mesonic exchange corrections to form factors,[15] pion condensation[16] and pion nucleus interactions.[17] The quantitative effects of such ambiguities may or may not be small in various pion-nucleus processes. We do not purpose to go into that at this time.

Instead we adapt a strategy which has often proven useful in theoretical physics. Namely, one formulates a description of the phenomena one wants to describe as comprehensively as possible. Then one approximates to the requisite (or needed) level of complexity. The alternative approach [which involves the adaptation of an intrinsically limited model (quark, shell etc) and pushing it as far as one can and then tacking on corrections to it] has been enormously successful under many circumstances. The latter type of approach has been the dominant motif of nuclear theory since its beginning. However, there are

some situations where tacking on corrections can be very ambiguous and at this point an attempt at the former approach is certainly warranted.

Let us ask then what is a nuclear bound state? Somewhat more specifically, we pose the following questions:

(a) How is the nuclear bound state characterized?

(b) How does a nuclear bound state enter into a consistent description of hadronic interaction processes (and in particular pion-nucleus interaction processes)?

(c) What is the nonrelativistic limit of a nuclear bound state [in the context of the answers to (a) and (b)] and under what circumstances is this limit adequate?

These are among (or perhaps even exhaust) the Ultimate Questions of nuclear structure physics. One does not find general answers to these questions, particularly (b), in the literature of nuclear physics. Often it is held that one does not need such general answers; we hope to illustrate that this is not necessarily the case.

The reason why questions (a) - (c) are not addressed even in the field-theoretic investigations reviewed in Sec.II is not hard to determine. What is required is the application of the relativistic field theory of composite particles[19] to the description of nuclei in scattering and reaction processes. A poll among nuclear theorists would probably yield some doubt as to whether tools adequate to the task exist. Possibly one of the most liberating side effects of the entire present endeavor is the realization that it is possible to handle problems involving nuclei in a manner which is not hopelessly pinned down to a nonrelativistic description which may include model

wave functions for which even the description of the center of mass motion is sometimes a problem.

In what follows we will suppose "ordinary" field theory, viz., that nucleons are (effectively) elementary, we have a unique vacuum, etc. At the present stage of the development of strong interactions (QCD, possibly many vacuua, instanton solutions etc) this picture is hardly as detailed as it could be. However, what is important is that we have a consistent covariant framework-an effective field theory. Once one has sorted out the essential points such as what the nuclear bound state is and what part of a scattering amplitude it represents, then one can progress to a some what more practical description of the nuclear states.[20-22]

The fundamental object for describing an N-nucleon system is the N-nucleon Green's function:

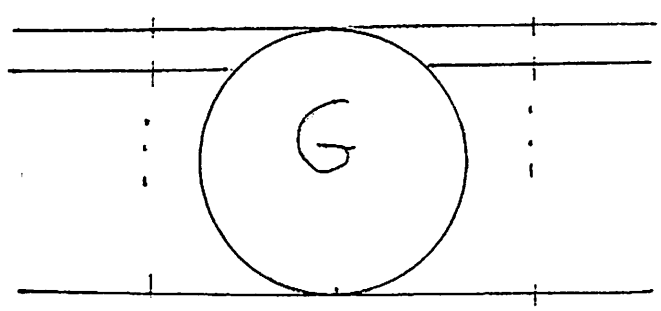

Fig. 6

Figure 6 represents the sum of all graphs which begin and end with N (dressed) nucleons.[23] (The solid crossed lines represent dressed nucleon propagators.) Then

N-nucleon Bound State ≡ N - nucleon Pole term in G

Such a pole term factorizes:

$$\sim \frac{\chi \chi^{\dagger}}{P^2 - M_N^{\,2}}$$

Fig. 7

In Fig. 7 the factorized residues of the pole are the (general) "wave functions" of the nuclear bound state.

It is important to determine the "wave equation" satisfied by the nuclear "wave function". Huang and Weldon[19] have shown that G satisfies a Bethe-Salpeter-type equation with the graphical representation

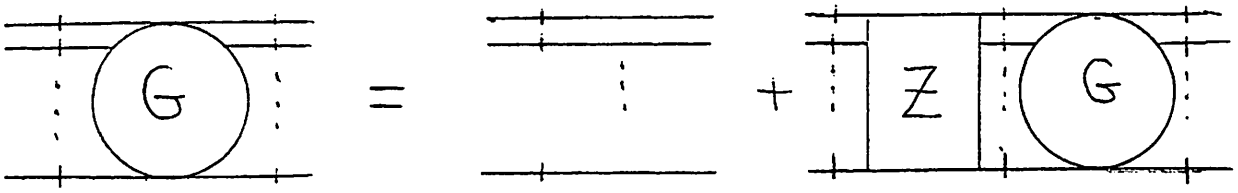

Fig. 8

Here Z is an "irreducible" kernel whose construction is a matter of some subtlety.[19] For our purposes all that matters is that Z is such

that an infinite iteration of the integral equation depicted in Fig. 8 yields G (with no redundant graphs).[24] The wave equation for the nuclear bound state corresponds to the homogeneous form of Fig. 8:

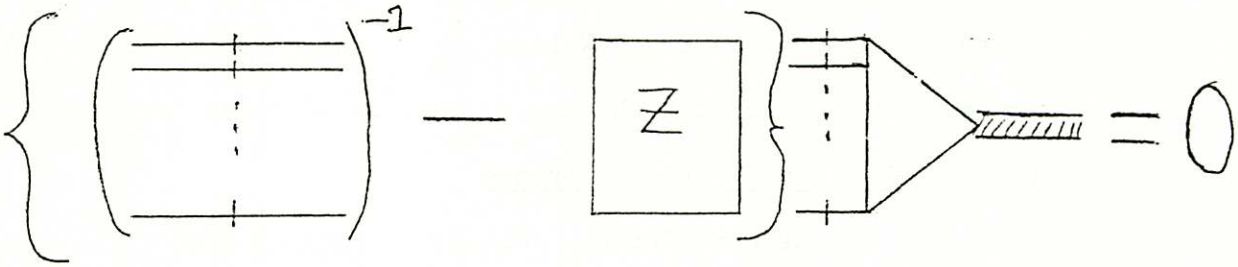

Fig. 9

Figures (6-9) are evidently not going to yield a facile description of ^{208}Pb. It is important to realize that our final results-and the thrust of our arguments-do not depend on the ultimate description of nuclear states in such an absurdly general manner. Nevertheless, certainly one of the more interesting questions of nuclear physics is how (in detail) the familar model of nuclei as nonrelativistic nucleons interacting via pair potentials emerges from the complete physical picture.

For our purposes the aspect of the nuclear bound state of central interest is how it appears in various pion-nucleus transition amplitudes. To illustrate what is involved here we take up several specific examples and work out the important features in detail.[20]

IV. $\underline{\pi + {}^3He \to N + d}$

This example is sufficiently simple so that only a few reaction mechanisms are possible yet complex enough to reveal the varied ways a nuclear bound state enters into a transition amplitude. The somewhat

overstudied case of $\pi + d \to N + N$ is too simple to reveal all the essential features. Our discussion is completely qualitative and is illustrated by a collection of graphs. The graphical rules for constructing transition amplitudes involving bound states can be found in the article by Huang and Weldon.[19] Our hope is that our picture-book approach will elucidate the basic ideas these rules represent.

(a) Two-Nucleon Absorption Graphs

Let us consider the following class of graphs:

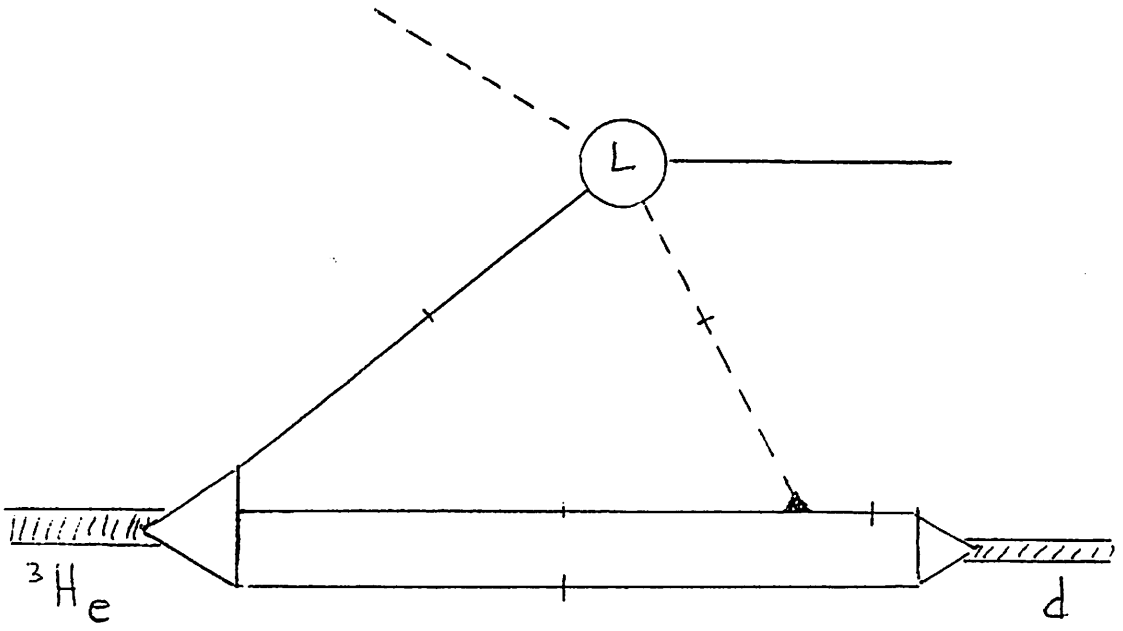

Fig. 10

Note:

(i) Crossed internal lines represented (dressed) particle propagators. External lines represent kinematics.

(ii) Dark Triangle represents (proper) πNN vertex

(iii) Open triangles represent (complete) nuclear wave functions (not vertex functions in general although in the deuteron case the concepts are essentially the same).

(iv) L is short for "legal".

The question we wish to address is whether or not L refers to the complete (off-mass shell) $\pi - N$ transition amplitude. The criteria for determining this relate to the rules[19] for building up the nuclear wave functions. In a somewhat oversimplified way, the rules require that all boson lines which can "slide down" the three ^{3}He nucleon lines, e.g., are illegal. The reason for this is that all such lines are by definition already built into the bound state. On interesting situation sometimes arises where two (or more) bound states "compete" for the same class of boson lines; this possibility is forbidden in Fig. 10 by the internal pion attachment.

In order to answer our initial question concerning L we remind ourselves that the pion-nucleon transition amplitude decomposes into three parts

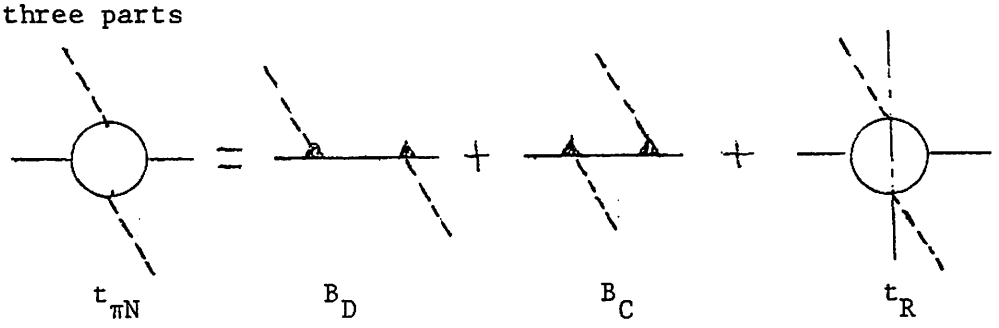

Fig. 11

Here B_D includes the direct (s-channel) nucleon pole and is represented analyically by

$$B_D = \Gamma_{\pi NN} \, S_F' \, \Gamma_{\pi NN} \quad ,$$

where S_F' is the full nucleon propagator and $\Gamma_{\pi NN}$ is the (proper) πNN vertex function. B_C has essentially the same analytical representation (but different kinematics) and it includes the crossed (u-channel) nucleon pole. t_R is the part of $t_{\pi N}$ which is irreducible with respect to cutting a single internal nucleon line.

If B_C is included in L in Fig. 10 we generate a class of illegal graphs:

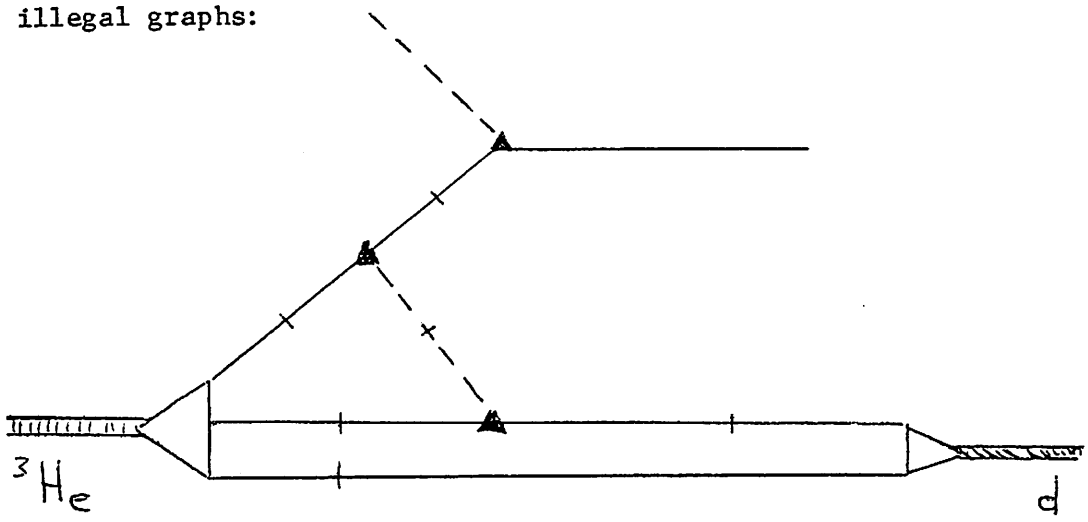

Fig. 11

Figure 11 represents an illegal class of graphs because the internal pion line can slide down into the ^3He wave function. Therefore, it has already been included in $\chi(^3He)$, cf. Fig.7.

If one is going subtract out B_C one best make sure what it is. Since B_C is the sum of all graphs of the form of Fig. 12.

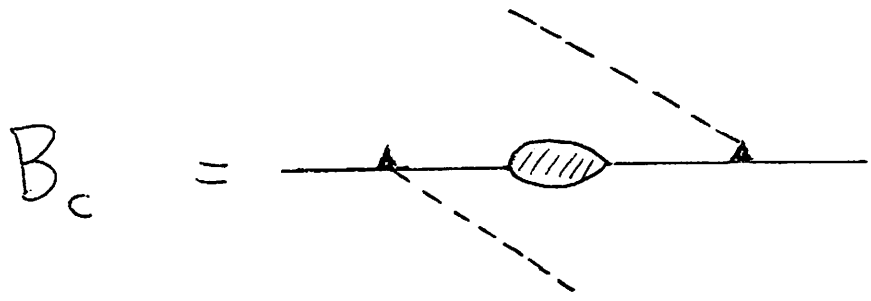

Fig. 12

It is <u>not</u> just the u - channel pole term. There is an important side point connected with this which is related to the PS vs. PV representation of the πN pole terms. This is explored in detail in Ref. 22, but the upshot is that it is generally incorrect to associate B_C with the usual PV representation of the crossed-nucleon-pole term. Another possible side question concerns the possibility of ghost poles in $\Gamma_{\pi NN}$.[25] These are poles (which are correlated with zeros in S_F') which can appear in B_C or B_D but which are canceled out by compensating poles in t_R. However, if one is using $t_{\pi N} - B_C$, e.g., the net amplitude will possess this unphysical pole. This matter is also taken up in Ref.22.

What about B_D as part of L?

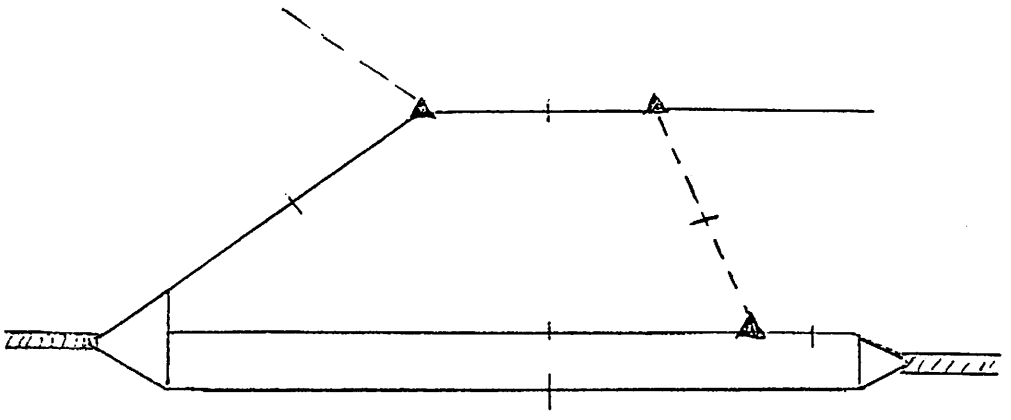

Fig. 13

Figure 13 is certainly legal, however one must keep in mind that it is part of the one-nucleon absorption process depicted in Fig. 14:

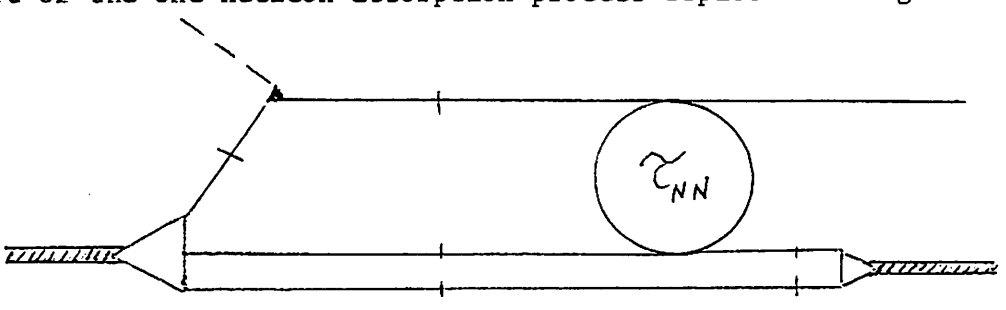

Fig. 14

Thus the two-nucleon absorption contribution without initial-or final-state distortions to $\pi + {}^3He \to N + d$ is given by Fig. 10 with $L = t_R$

(b) Final - State Interactions

The question arises as to the form of the final-state interactions on a set of graphs such as Fig. 10 with $L = t_R$. Applying the rules[19] one finds that the appropriate set of graphs are:

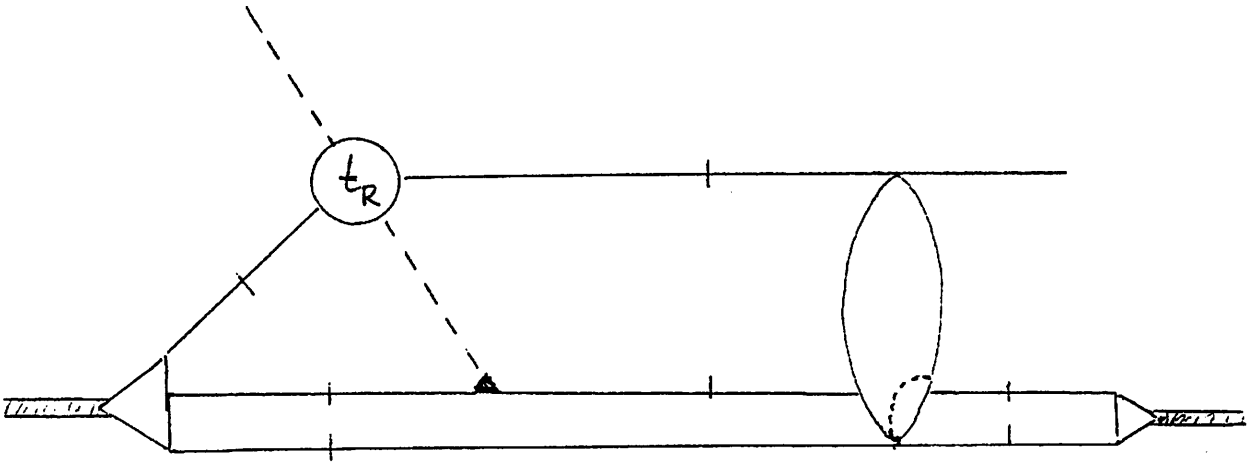

Fig. 15

Here

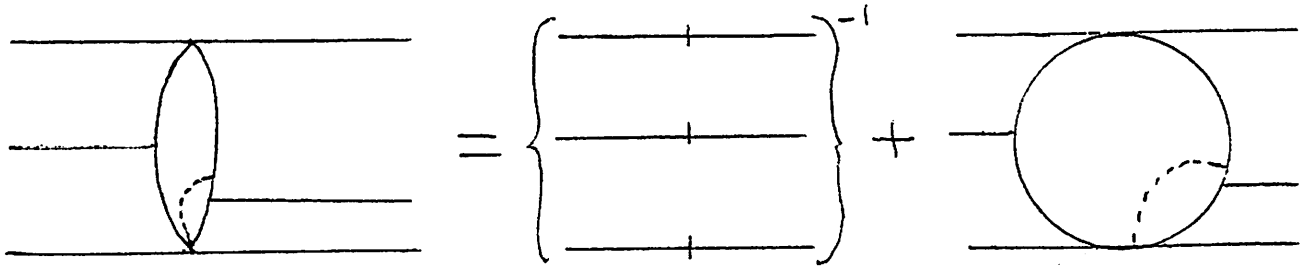

Fig. 16

In Fig. 16 the circle represents all connected $3N \to 3N$ graphs which are irreducible with respect to the two lines encircled by the dashes. Irreducibility here means that the amplitude cannot be split into two connected pieces by snipping the two relevant (internal) nucleon lines; i.e. there is no blob attached to these nucleon lines which

can slide off to the right on the two encircled nucleon lines. Also we note that

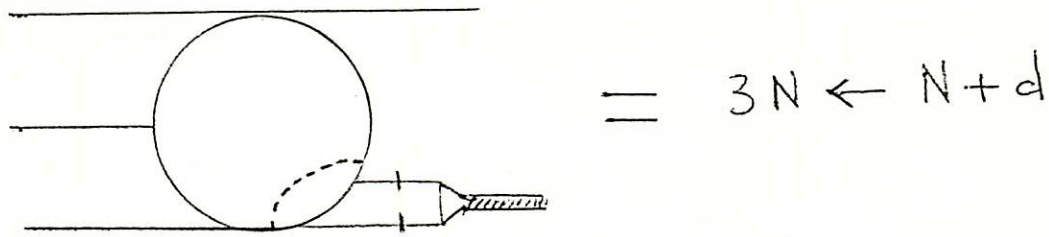

Fig. 17

(c) Initial - State Interactions

The appropriate initial - state interactions appended onto Fig. 10 with $L = t_R$ have the structure indicated in Fig. 18.

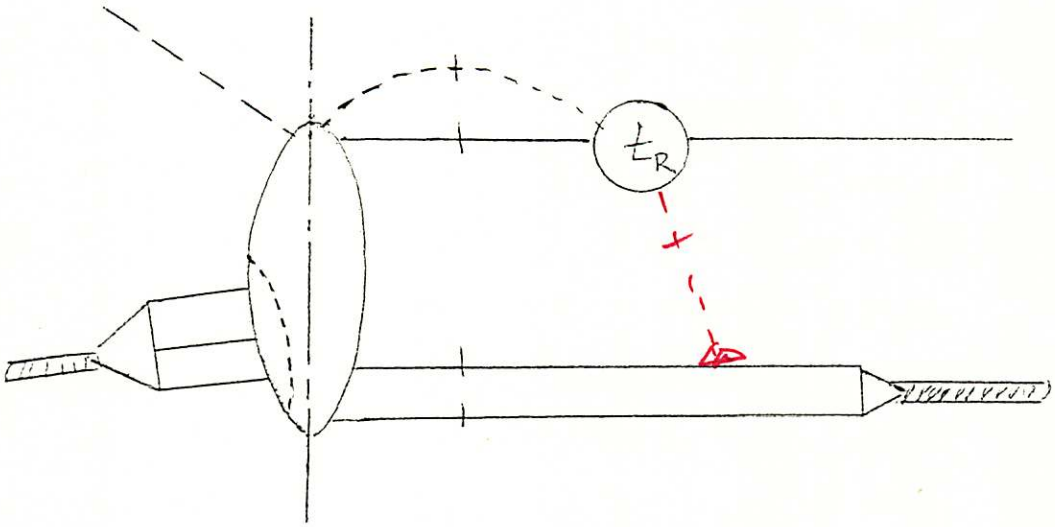

Fig. 18

The specification of the initial-state interaction in Fig.18 is tricky. Evidently it doesn't do to have any true pion absorption in this interaction if Fig. 18 is to be regarded as a low-order realization of the two-nucleon absorption mechanism. Otherwise the

part connected onto t_R could be moved to the right and be regarded as a final-state interaction of some other absorption process. This would not necessary yield an illegal diagram-merely a confusing one.

The initial-state blob in Fig. 18 has the structure

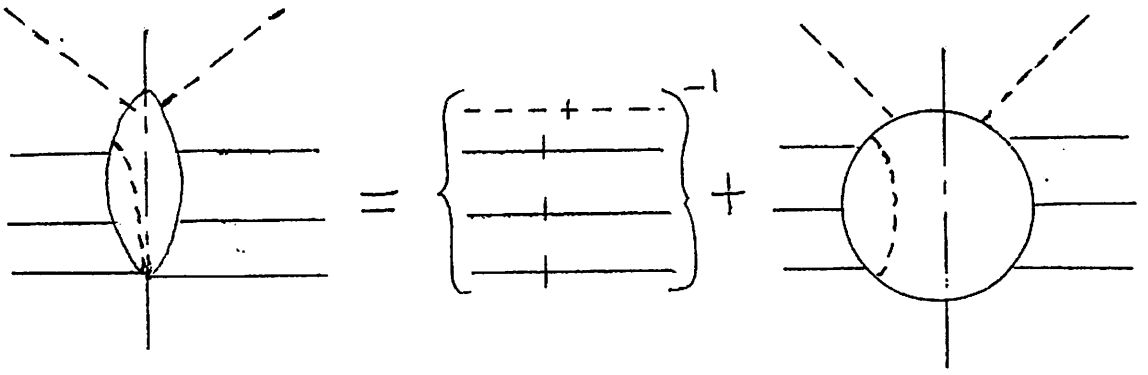

Fig. 19

The vertical dot-dashed line indicates irreducibility with respect to three internal nucleon lines. Namely, it is not possible to split the egg on the right of Fig. 19 into two connected pieces by cutting only three internal nucleon lines. This means, very roughly, that any intermediate state always contains a pion so no true absorption is included in the initial-state interaction. [For high enough energies our irreducibility criteria lets in, e.g. real $N\bar{N}$ pairs in the intermediate state. Thus we have not ruled out all "true" absorption options.] It is also worth remarking that the amplitude illustrated in Fig. 20

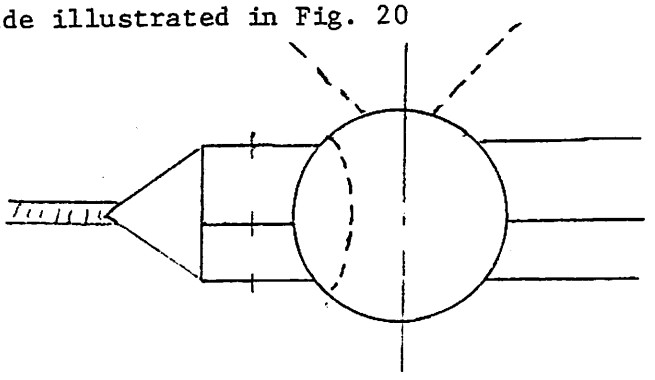

Fig. 20

is <u>not</u> the amplitude for $\pi + {}^3He \to \pi + 3N$. Also the amplitude in Fig. 20 is only part of the distorted wave which would follow by using an optical potential which fit the elastic process $\pi + {}^3He \to \pi + {}^3He$.

(d) <u>Evolution of the One-Nucleon Absorption Graphs</u>

We now consider the simplest pion absorption process namely that which occurs on a single target nucleon. The construction of the amplitude for this process contains a new subtlety, namely two bound states which can "cannibalize" each other. Let us begin with a class of graphs which have the initial external pion line ending on a single nucleon line and a ${}^3He$ bound state which is created by having it consume anything which can slide down the three nucleon lines. (Fig. 21).

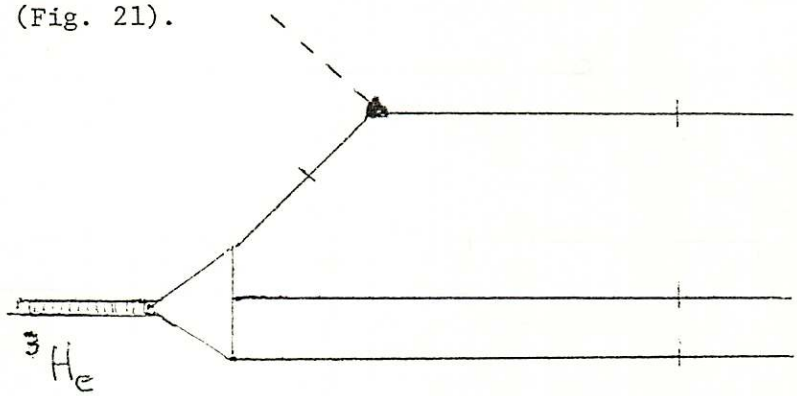

Fig. 21

Note that this a bybird graph with "kinematic" initial external lines (i.e. the relevant propagators have been stripped off on mass shell) but propagator final nucleon lines. Figure 21 is not yet a one-nucleon absorption transition amplitude for $\pi + {}^3He \to N + d$ since we have no deuteron final state. How do we get one?

Note that the two-nucleon Bethe-Salpeter equation can be rewritten in the form shown in Fig. 22.

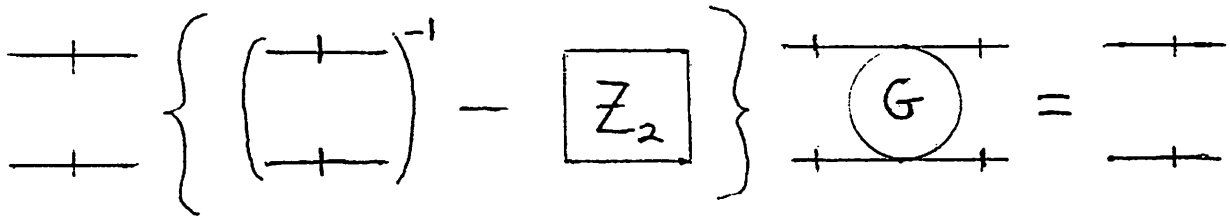

Fig. 22

We can then replace the two free nucleon lines emanating from the ^{3}He bound state by the left-hand side of the identity Fig. 22. In order to obtain our derived scattering amplitude we go through the standard procedure of going for the residue of the simultaneous nucleon and deuteron poles. We then obtain

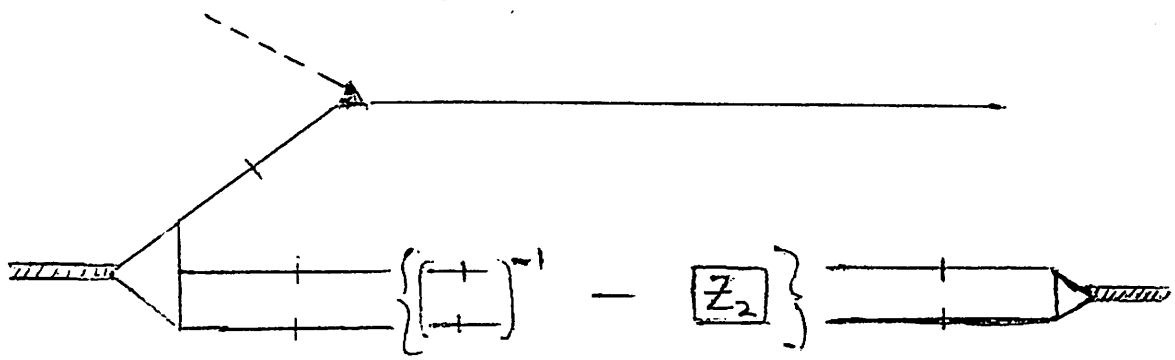

Fig. 23

At this point the average nuclear theorist peering at Fig. 23 will begin to doubt the sanity of this approach to things.

How do we get rid of the Z_2 lump in the middle of Fig. 22? There are three options.

<u>Option 1</u>: Ignore the Z_2 lump in Fig. 23 since it seems as if we have made some ghastly error. However, the resulting graph would

be illegal. The reason for this is that the ^{3}He has already "eaten" everything which could slide down the relevant two-nucleon lines and such blobs cannot be used to build up the deuteron. However, the deuteron wave function obviously contains parts which are two-nucleon reducible and the Z_2 lump is compensating for that fact. The moral of this story is that it is possible to have two wave functions competing for the same subdynamics. If we choose to express the total amplitude in terms of both wave functions in order to avoid overcounting we must subtract the contested piece of turf and leave this negative contribution in suspension between the two wave functions. Or we can explicitly excise this piece from one or the other of the wave functions. This leads us to the remaining two options.

<u>Option 2</u>: Use the Bethe-Salpeter equation for the ^{3}He wave function. One then deduces the identity given in Fig. 24.

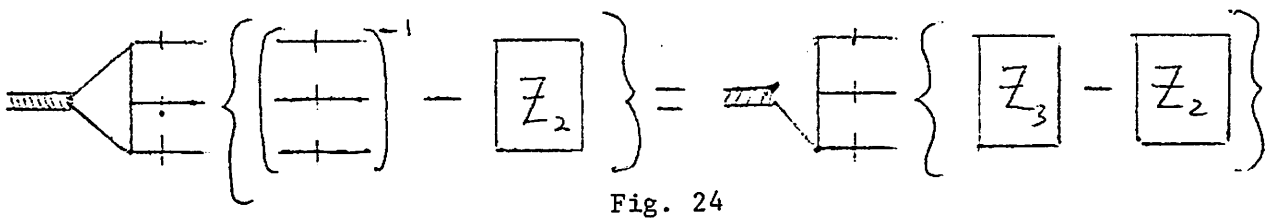

Fig. 24

Obviously Option 2 leads to nothing familiar.

<u>Option 3</u>: Vertex Functions

This option pays off in something that is recognizable. At this point a reader with a memory of Fig. 9 may wonder why the graph of Fig. 23 is not trivial. The reason why it is not is the

heart of Option 3.

Let τ_{NN} denote the two-nucleon (off mass shell) transition amplitude. It satisfies Bethe-Salpeter equations which follow from Fig. 8. For example:

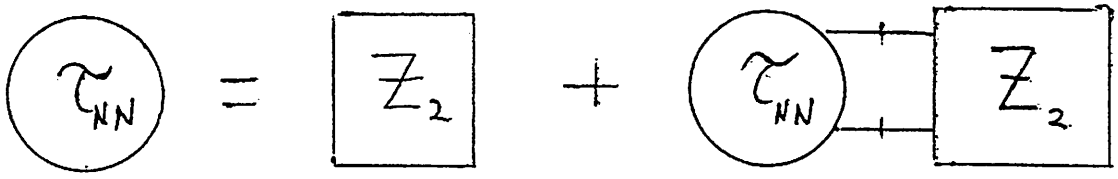

Fig. 25

It is more convenient for the present argument to leave off the "phony" external lines in Fig. 25. From Fig. 25 one easily proves the identity

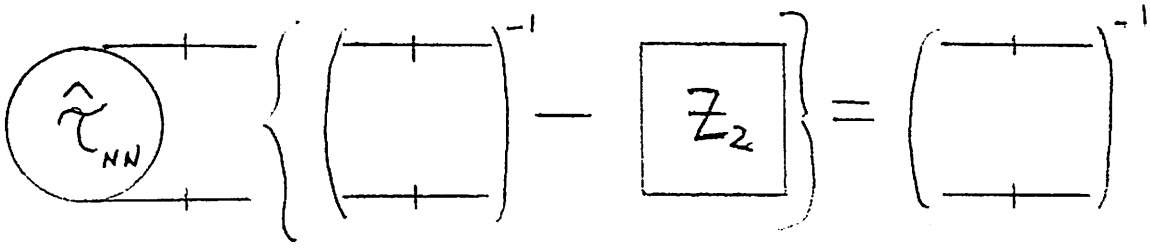

Fig. 26

In Fig. 26 we have

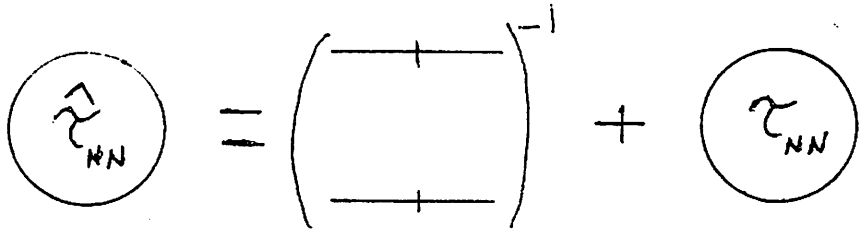

Fig. 27

Thus a nucleon-nucleon final-state interaction in the ^{3}He wave function can kill the Z_2 lump. This structure of the bound-state wave function is conveniently stated in terms of a vertex function as portrayed in Fig. 28.

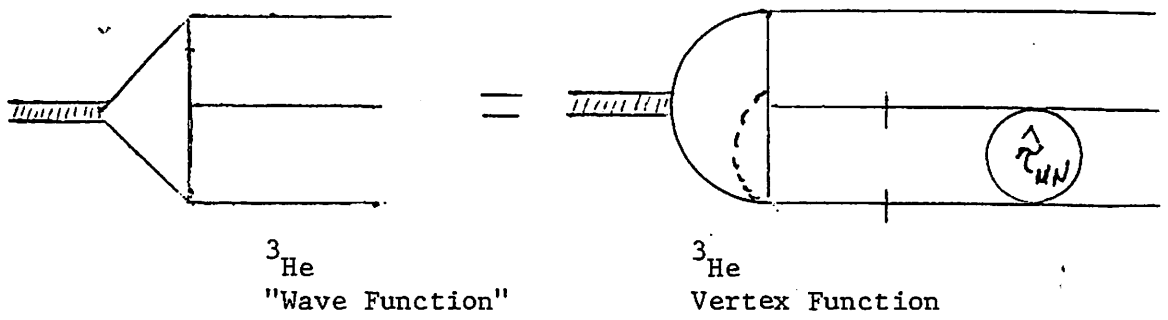

Fig. 28

The semicircular object in Fig. 28 represents the particular vertex function in question. It is irreducible in the two encompassed nucleon lines. We note that $\hat{\tau}_{N,N}$ contains the deuteron pole and so only part of the ^{3}He wave function can be expressed in terms of a (^{3}He)-N-d vertex function.

If we combine our results we obtain, finally, for the one-nucleon absorption graph Fig. 29:

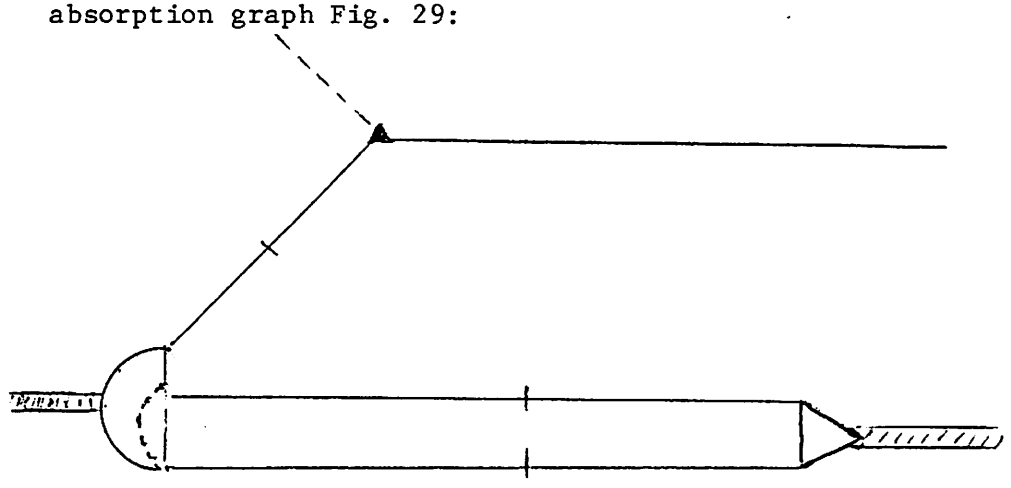

Fig. 29

It is instructive to recall what happens in a nonrelativistic problem involving a ^{3}He wave function, e.g. elastic p-^{3}He scattering in the impulse approximation. Here the ^{3}He wave function $|\psi\rangle$ can be written as

$$|\psi\rangle = \sum_{\alpha=1}^{3} |\psi_\alpha\rangle ,$$

where the Faddeev components $|\psi_\alpha\rangle$ satisfy

$$|\psi_\alpha\rangle = G_0 \, t_\alpha \sum_{\gamma \neq \alpha} |\psi_\gamma\rangle ,$$

where t_α is the two-particle transition operator and G_0 the free Green's function. Corresponding to Fig. 28 we can write

$$|\psi\rangle = (1 + G_0 \, t_1) \{ |\psi_2\rangle + |\psi_3\rangle \} .$$

Here $1 + G_0 \, t_1$ corresponds to $\tilde{\tau}^{\dagger}_{NN}$ and $\{ |\psi_2\rangle + |\psi_3\rangle \}$ is the ^{3}He vertex function irreducible with respect to nucleons 2 and 3. An approximation is necessarily involved (except for strictly separable interactions) to represent $|\psi\rangle$ in terms of only the deuteron-pole part of $\hat{\tau}_{N,N}$.

(e) <u>Final-State Interactions</u>

After our hyper-detailed demonstration of the rules of this game it is almost obvious that the complete contribution from the one-nucleon absorption process with final-state interactions is given in Figs. 30,31:

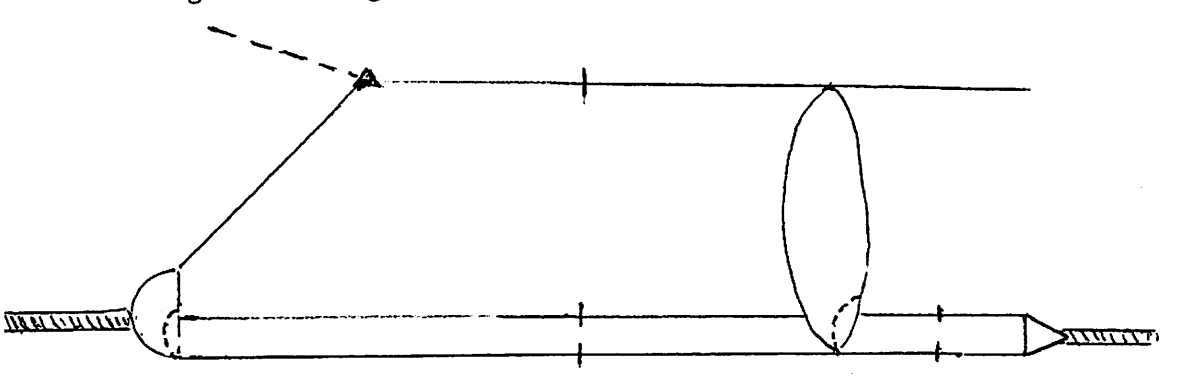

Fig. 30

where

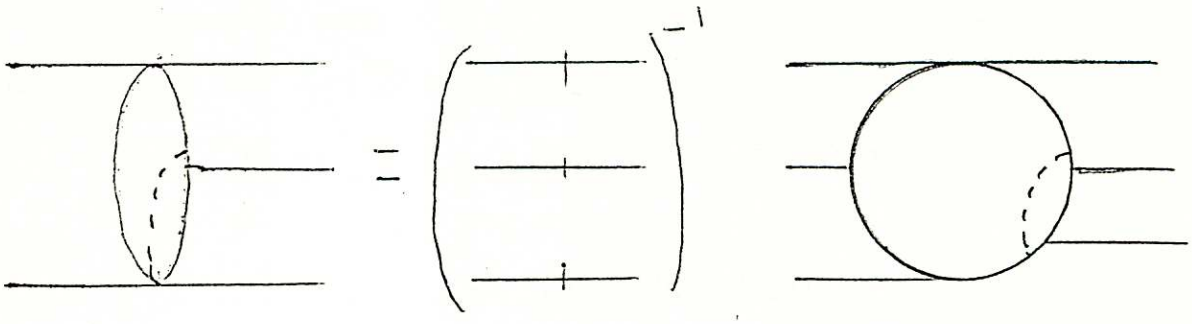

Fig. 31

The round graph on the right side of Fig. 31 is directly related to $3N \to N + d$. The other term gives the part of Fig. 30 pictured in Fig. 29.

(f) Initial-State Interactions

As in subsection (c) things are a little more complicated here. One finds the situation illustrated in Figs. 32,33:

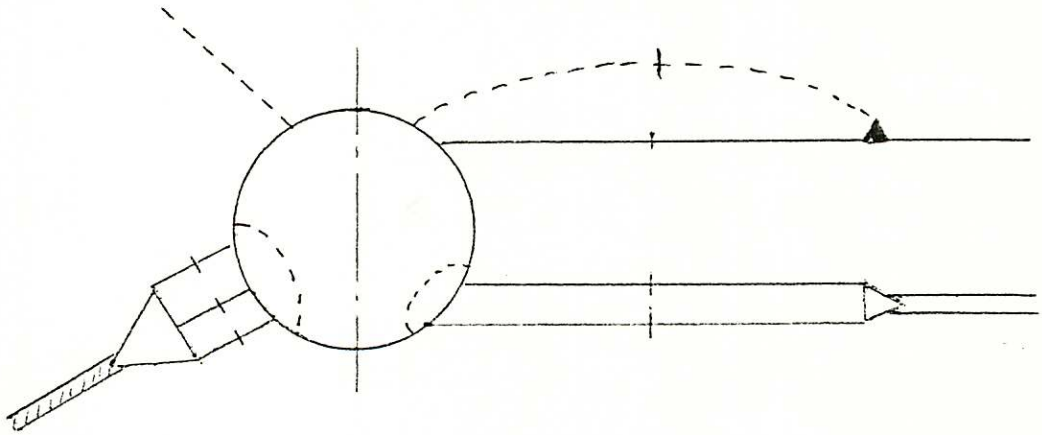

Fig. 32

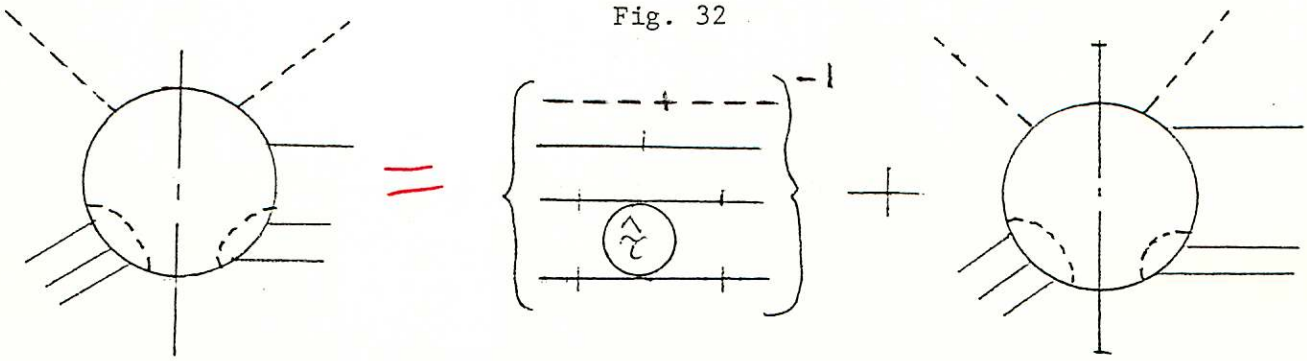

Fig. 33

The connected part of Fig. 33 is irreducible with respect to three internal nucleons. This amplitude yields only part of $\pi + {}^3He \to \pi + N + d$ when folded into ${}^3He$ and d wave functions. This irreducibility constraint is needed in order not to double count self-energy insertions onto the upper nucleon line in Fig. 32.

(g) <u>Complete Absorption Amplitude</u>

Clearly the complete amplitude for $\pi + {}^3He \to N + d$ can be represented as in Figs. 34,35

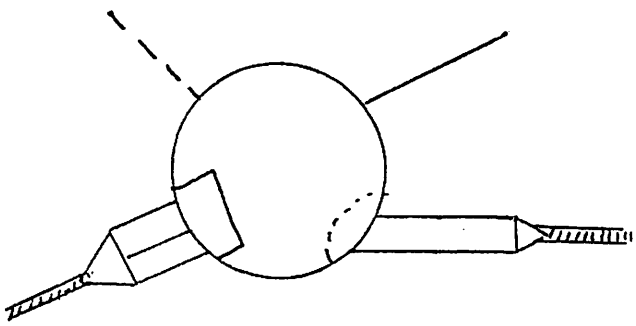

Fig. 34

where

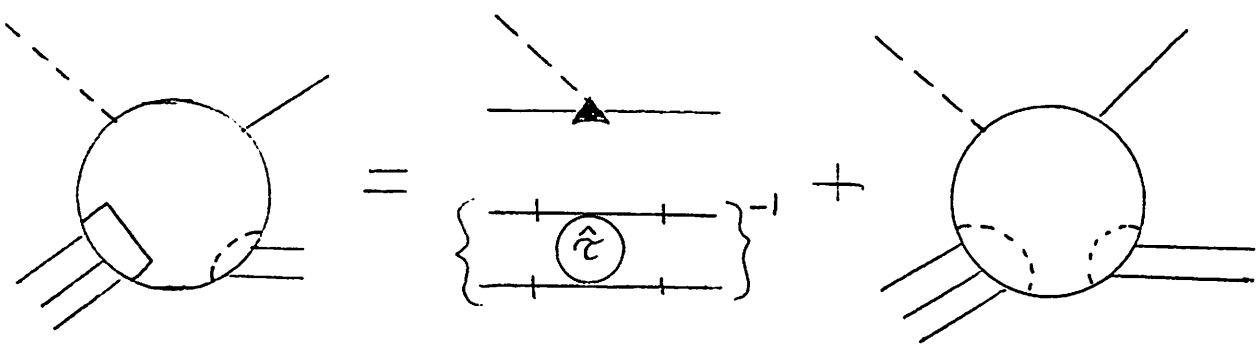

Fig. 35

The connected part of Fig. 35 is irreducible in the encircled groups of incoming and outgoing nucleons. This means that the

amplitude contains nothing which can slide down these lines into the jaws of an awaiting ^{3}He or d wave function. The disconnected part of Fig. 35 yields Fig. 29 when it appears in Fig. 34.

V. $\pi + {}^3\text{He} \to \pi + {}^3\text{He}$

(a) Making Elastic Scattering Out of Absorption

If we consider Fig. 34 and its time reverse we can construct an entire class of elastic scattering graphs which we show in Fig. 36:

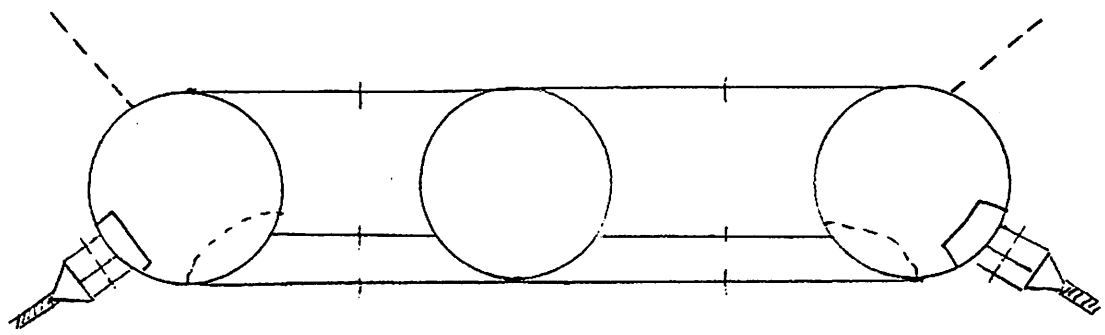

Fig. 36

The intermediate-state interaction is given in Fig. 37:

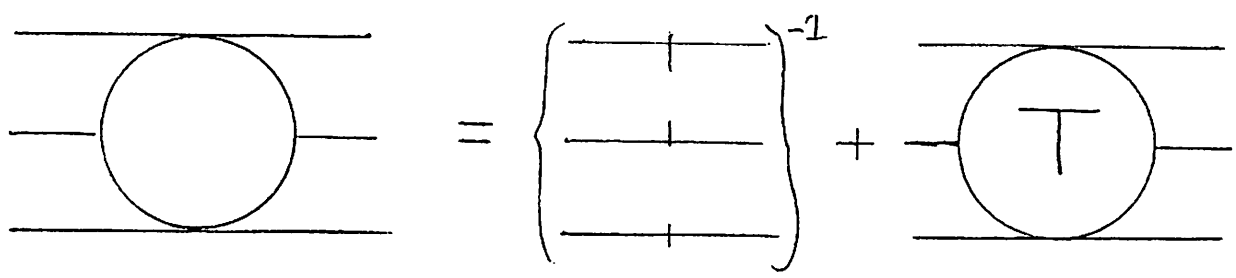

Fig. 37

The T amplitude in Fig. 37 is the 3N → 3N amplitude including its two-nucleon disconnected parts.

Evidently Fig. 36 is a precise characterization of what is often referred to as the <u>True Absorption</u> part of $\pi + {}^3\text{He} \to \pi + {}^3\text{He}$.

What about the rest of the elastic amplitude? This leads us to:

(b) "True" Elastic Part of $\pi + {}^3He \to \pi + {}^3He$

The true elastic part of the elastic amplitude is what is left over after considering the true absorptive part Fig. 36. Evidently the true elastic part is given in Fig. 38:

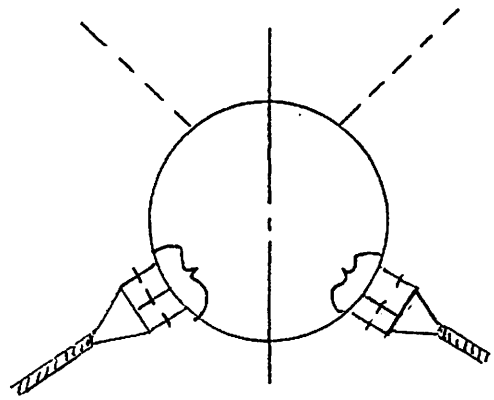

Fig. 38

In Fig. 38 the amplitude is Bethe-Salpeter irreducible with respect to three internal nucleon lines (vertical short-dash-long-dash line). The brackets surrounding the external lines mean that the amplitude is irreducible with respect to things sliding down the external lines except for any "slosh" which can be exchanged, unimpeded, between the two wave functions. This is analogous to the situation analyzed IV(d). Namely, there are some types of graphs of the class of Fig. 38 which do not have enough dynamics to build two ${}^3He$ wave functions. For the case at hand this situation arises for only one class of graphs-the impulse graphs.

(c) Analysis of the Impulse Term

The full impulse term is given in Fig. 39:

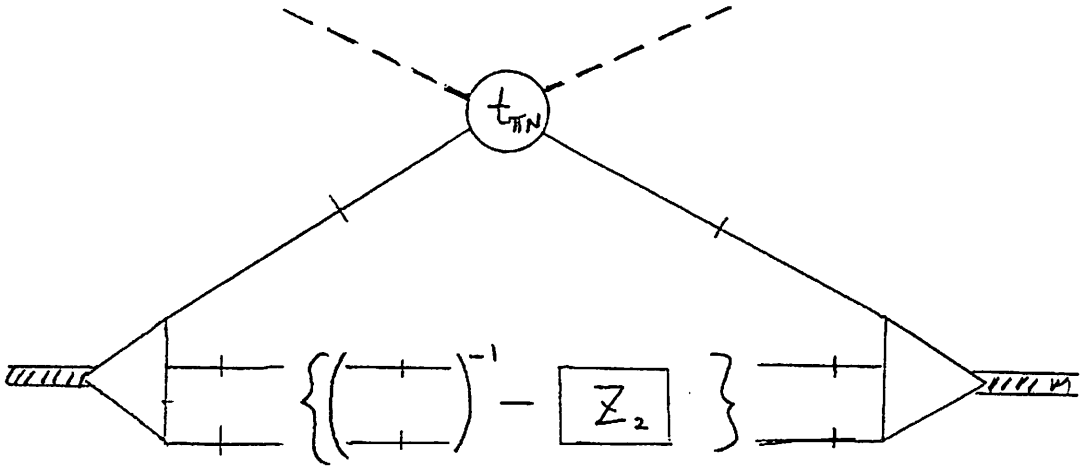

Fig. 39

$t_{\pi N}$ refers to the complete πN amplitude. Using the analysis of IV(d) we find that Fig. 39 can be reduced to the form shown in Fig. 40:

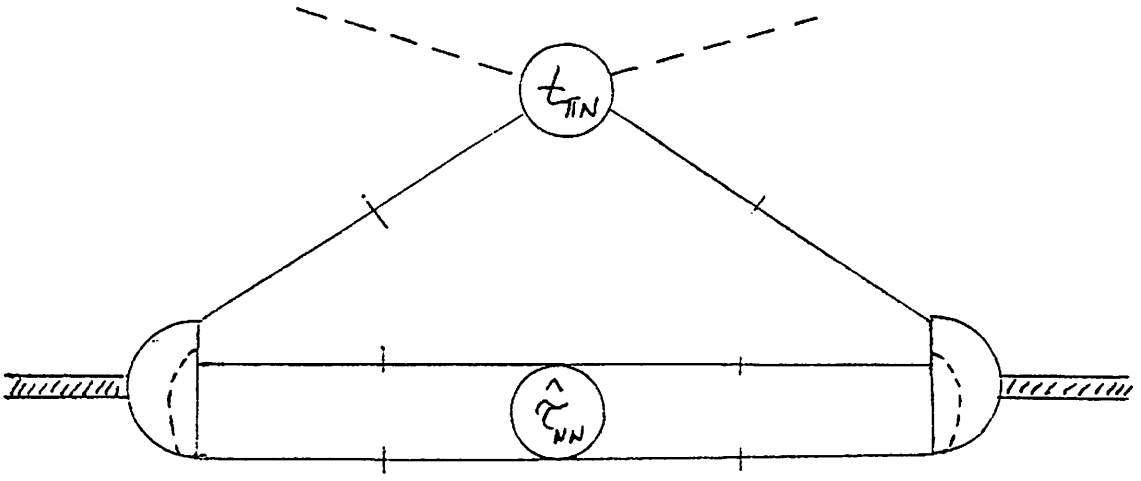

Fig. 40

The piece of the impulse graph arising from B_D makes a contribution to the true absorptive part (Fig. 41):

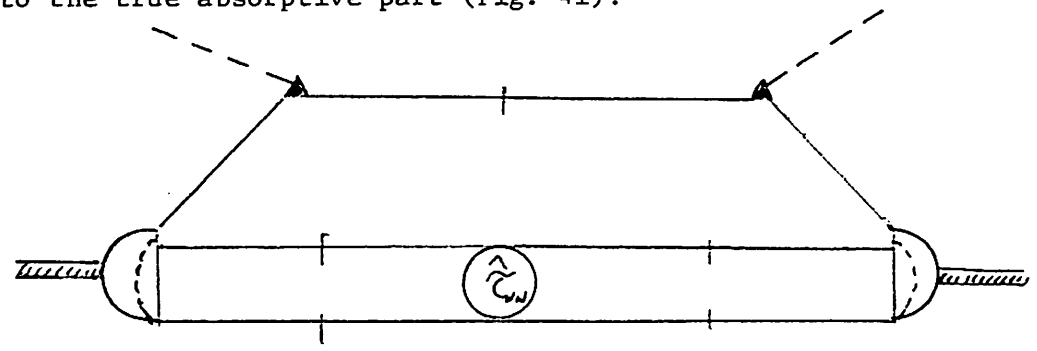

Fig. 41

B_C and t_R contribute to true elastic scattering (Fig. 42):

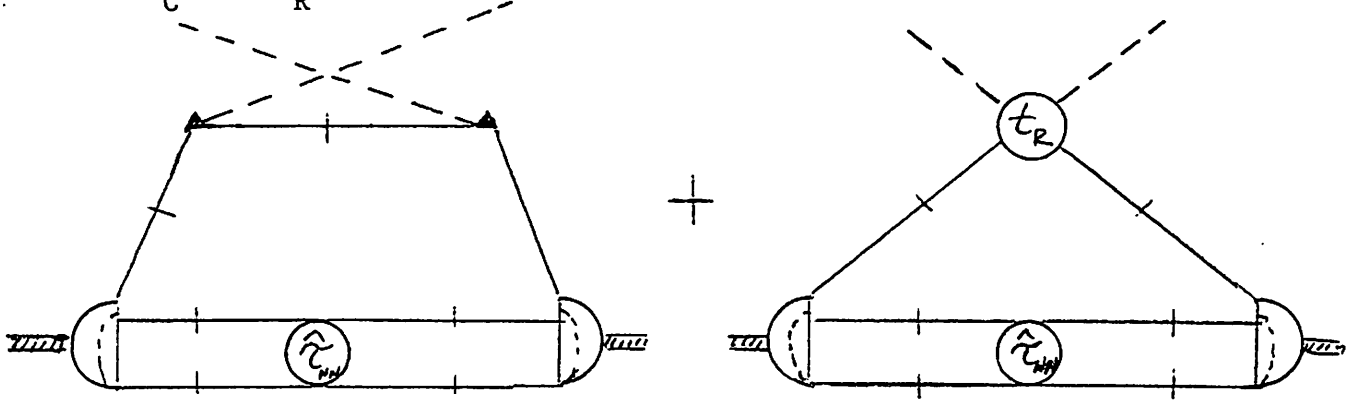

Fig. 42

Also we note the approximate relationship shown in Fig. 43 in which the exact impulse graph of Fig 40 is approximated in terms of ^{3}He - d - N vertex functions. The latter can be approximated in terms of ordinary nuclear wave functions.

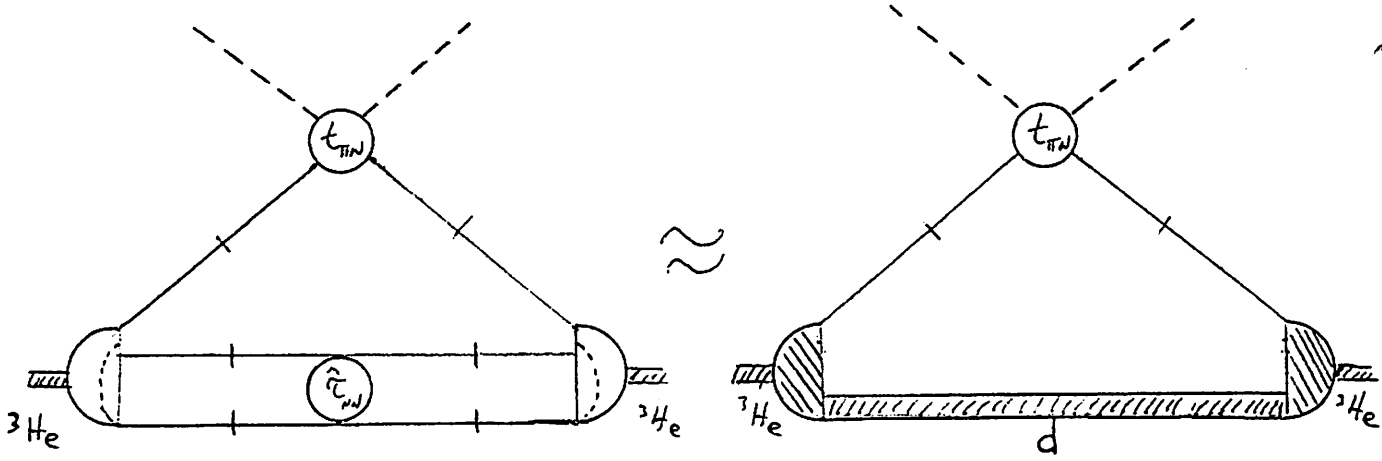

Fig. 43

VI. WHAT DOES THIS ALL MEAN.[26]

We have certainly gained something intellectually by attempting to deal with the full physical complexity of the nuclear bound state as it is manifested in pion scattering and reaction processes. However, as we implied earlier on, if we really have to think about full Bethe-Salpeter wave functions for something like ^{208}Pb in order to get anything out of this, the entire picture is nice but

unrealistic. Also, all of our graphical rules and results are stated in terms of (sums of) Feynman graphs. Although this is how you do it if you want it right, in most instances one wants a noncovariant graphical description of the target nucleons in accord with their nonrelativistic motion and the description of their distribution in terms of phenomenological wave functions.

At this stage it is not entirely clear how one systematically passes from our completely covariant description to a more practical framework which is some hybrid of field theory and nonrelativistic quantum mechanics. However, it seems safe to suppose that some of the global-and simple-rules which we have found to avoid overcounting physics already in the bound state are valid in the limit where the nucleus is described in terms of a nonrelativistic Schrödinger wave function.[27] Some of these rules have been proposed before in pion-nucleus problems but never in conjunction with a full physical description of the nuclear bound state.

An artifical strain is placed upon discussions of the sort we have engaged in here by the not totally unreasonable insistence that we make explicit contact with a description in terms of phenomenological nonrelativistic nuclear wave functions. As we have seen it is not always so easy to do this consistently. (One of the reasons for this, however, is the rather amorphous definition of the phenomenological wave functions.) However, it appears that the future lies more in the direction of increasingly physically realistic nuclear models (mean-field theories, one-boson exchange models, the consequences of

the QCD description of strong interactions, etc.) rather than rehashing the limitations of the old models. Once one opens the door to a real field-theoretic description of nuclei one is inevitably led to the sort of analysis we have found it essential to enter into. Thus, at this point it seems also incumbent upon the proponents of the more or less standard points of view to see how their models stack up with more complete physical descriptions.

1. C.D. Dover, J. Hüfner, R.H. Lemmer, Ann. Phys. 66, 248 (1971); C.D. Dover and R.L. Lemmer, Phys. Rev. C 14, 2211 (1976); G.A. Miller, Phys. Rev. Letters, 38, 753 (1977), Phys. Rev. C 14, 2230 (1976), ibid C 16, 2325 (1977); M.A. Alberg,, E.M. Henley, G.A. Miller, and J.F. Walker, Nucl. Phys. A306 447 (1978). (See also C.Y. Cheung, E.M. Henley and G.A. Miller, preprint, for corrections to this work), G.A. Miller and E.M. Henley, preprint.

2. H. Lehmann, K. Symanzck and W. Zimmermann, Nuovo Cimento 1, 205 (1955).

3. M. Ericson and M. Rho, Physics Reports 5C, 58 (1972). M.K. Banerjee, C.A. Levinson, M.D. Shuster and D.A. Zollman, Phys. Rev. C 3, 509 (1971), ibid C 13, 2444 (1975); J.B. Cammarata, and M.K. Banerjee Phys. Rev. Letters 31, 610 (1973), Phys. Rev. C 12, 1595 (1975), ibid, C 13, 299 (1976).

4. R.L. Ingraham, Ann. Phys. 99, 231 (1976); E.R. Siciliano (Indiana Thesis 1976); E.R. Siciliano and R.M. Thaler, Ann Phys. 115, 191 (1978).

5. R.H. Hackman, Phys. Rev. C 19, 1879 (1979).

6. I.R. Afnan and A.W. Thomas, Phys. Rev. C 10, 109 (1974); A.W. Thomas, Flinders U. Thesis (1973); R.M. Woloshyn, E.J. Moniz, and R. Aaron, Phys. Rev. C 13, 286 (1976); A.S. Rinat and A.W. Thomas, Nucl. Phys. A282, 365 (1977); A.S. Rinat, ibid A287, 399 (1977), M. Stingl and A. Stelbovics, J. Phys. G4, 1371, 1389(1978), Nucl. Phys. A299, 391 (1978); B.J. Ver West, Phys. Lett. B8 3,000 (1979); D. Eyre and B.J. Ver West (preprint);

V.B. Mandelzweig, H. Garcilazo, and J.M. Eisenberg, Nucl. Phys. A 256, 461 (1976); A.M. Green and J.A. Niskanen, ibid, 503 (1976); T. Mizutani, U. of Rochester Ph.D. Thesis (1976); T. Mizutani, and D.S. Koltun, Ann. Phys. (N.Y.) 109, 1 (1977); Y. Avishai and T. Mizutani (SACLAY preprints), I.R. Afnan and B. Blankleider, Flinders preprints.

7. J.G. Taylor, Nuovo Cim. Suppl. 1, 857 (1963); Phys. Rev. 150, 1321 (1966).

8. A.M. Green and J.A. Niskanen, Nucl. Phys. A271, 503 (1976), M. Brack, D.O. Riska, and W. Weise, Phys. Lett. 61B, 41 (1976), Nucl. Phys. A287, 425 (1977); B. Keister and L. Kisslinger, ibid. A326, 445 (1979); J.A. Niskanen, ibid. A298, 417 (1978).

9. L.S. Celenza, M.K. Liou, L.C. Liu, and C.M. Shakin Phys. Rev. C 10, 398, 435 (1974); L.S. Celenza, L.C. Lui, and C.M. Shakin, ibid. C 11, 437, 1593 (1975), ibid. C 12, 194, 1983 (1975); L.S. Celenza, L.C. Liu, W. Nutt, and C.M. Shakin, ibid, C 14, 1090(1976); L.C. Liu and C.M. Shakin, ibid. C 14, 1885 (1976), ibid. C 16, 1963 (1977); L.S. Celenza, ibid. C 19, 447 (1979).

10. R. Blankenbecler and R. Sugar Phys. Rev. 142, 1051 (1966).

11. L.C. Liu and C.M. Shakin in Progress in Particle and Nuclear Physics, Edited by Sir Denys Wilkinson (Pergamon Press), to be published.

12. We have ignored as irrelevant to our considerations all of those calculations of pion-nucleus interactions which employ more or less conventional scattering techniques.

13. See, e.g., Mesons in Nuclei Vol.III, Editors M. Rho and D. Wilkinson (North-Holland), 1979 and, e.g., B.B. Serat and J.D. Walecka, Phys. Letters 87B, 172 (1979).

14. G.E. Brown, A.M. Green, A.B. Gerose, Phys. Rev. 168, 1965 (1969); B.S. Wilde, S.A. Coon, M.M. Scadron, Phys. Rev. D19, 2021 (1979).

15. M. Chemtob and M. Rho, Nucl. Phys. A163, 1 (1971); R.H. Thompson and L. Heller, Phys. Rev. C 7, 2355 (1973); R.M. Woloshyn, Phys. Rev. C 12, 901 (1975).

16. B. Wilde, University of Arizona Thesis (1979).

17. A.W. Thomas, Nucl. Phys. A258, 417 (1976), Flinders University Ph.D. thesis (1973); T. Mizutani and D. Koltun, Ann. Phys. (N.Y.) 109,1 (1977); T. Mizutani, Ph.D. thesis, University of Rochester, 1976 (unpublished), A.S. Rinat, Nucl. Phys. A287, 399 (1977); L.C. Lui and C.M. Shakin, Brooklyn College Report No. B.C. I.N.T.-77/121, 1977 (unpublished R.S. Bhalerao, L.C. Liu, and C.M. Shakin, Brooklyn College-C.U.N.Y. Report No. B.C.I.N.T.-79/041/93 (unpublished); M.K. Banerjee, C.A. Levinson, M.D. Shuster and D.A. Zollman, Phys. Rev. C 3, 509 (1971); ibid, C 13, 2444 (1975).

ho #18

18. K. Nishijima, Prog. Theor. Phys. 10, 549 (1953); 12, 279 (1954); 13, 305 (1955); Fields and Particles (Benjamin, New York, 1969), Chap. 7, pp. 247-301; R. Haag, Phys. Rev. 112, 669 (1958); S. Mandelstam, Proc. Roy. Soc. A233, 248 (1955); A. Klein and C. Zemach, Phys. Rev. 108, 126 (1957);

R. Blankenbecler, Nucl. Phys. 163, 345 (1958); D. Lurie, Particles and Fields (Interscience, New York 1968) Chap. 9, 417-444; K. Huang and H.A. Weldon, Phys. Rev. D 11, 257 (1975).

20. The subsequent development is based largely on the work reported in Refs. 21 and 22. Some points are elaborated upon more fully here but others are straightforward extensions of Ref. 21 and 22 using the methods of Huang and Weldon (Ref. 19). We consider the latter to be most comprehensive description of composite particle scattering available. Huang and Weldon were especially concerned with the description of hadrons as bound states of quarks. Viewed in this way ordinary "elementary" hadron scattering processes are composite particle problems. Nothing prevents us from applying this formalism to nuclear interactions; indeed Huang and Weldon repeatedly and conveniently deal with N-fermion bound states in various contexts.

21. K.L. Kowalski , E.R. Siciliano, and R.M. Thaler, Phys. Rev. C 19, 1843 (1979).

22. K.L. Kowalski, Phys. rev. C 20, 2022 (1980).

23. In momentum space G is realized analytically as the Fourier transform of the vacuum expectation value
$\langle 0 | T\{\psi(x_1') \cdots \psi(x_N') \bar{\psi}(x_1) \cdots \bar{\psi}(x_N)\} | 0 \rangle$.

24. Connected kernel versions of the integral equation depicted in Fig. 8 are derived in K.L. Kowalski, Phys. Rev. D 20, 2526 (1979).

25. T. Mizutani and P. Rochus, Phys. Rev. C 19, 958 (1979).

26. This question can also be fairly leveled at nearly all of the preceding references in pion physics as well as many calculations not referred to here.

27. Somewhat more detailed arguments have been presented in Refs. 21,22.